.

Single-Point Diamond Turning of Features with Large Azimuthal Slope

Alex Sohn, Neil Naples
Facebook Reality Labs
Redmond, WA, USA

INTORDUCTION

Molded plastic optics, specifically anamorphic and freeform components, have become almost exclusively reliant on single-point diamond turning of molds and masters. Since diamond turning is a deterministic process, it can integrate mechanical and optomechanical features into the same machining operation and guarantee alignment with optical surfaces. With the advent of slow tool servo (STS) and fast tool servo (FTS) machining processes, it became possible to diamond turn non-rotationally symmetric optical surfaces and other features. However, STS and FTS are both limited by tool clearance when surfaces become steep in the azimuthal (rotational) direction. Large primary clearance tools are one way to address this, but those tools are costly, can be time consuming to manufacture, and have fragile edges susceptible to wear and damage. Diamond milling is another possibility for dealing with large azimuthal slopes, but this usually comes at the price of diminished surface roughness and surface figure error related to long cycle times. We present here a process for diamond turning steep azimuthal slopes using conventional diamond turning tools by taking advantage of multi-axis motions available on diamond turning machines with a vertical Y-axis.

METHOD

As illustrated by the example cylindrical lens schematically being turned in Fig. 1, as the azimuthal slope is large near the periphery of the part, the front clearance angle of the diamond tool is insufficient for a conventional STS or FTS operation. However, as illustrated in Fig. 2, additional front clearance in the azimuthal direction can be gained if the tool is rotated about its axis (parallel to the turning axis). Essentially, this results in trading some radial clearance for azimuthal clearance.

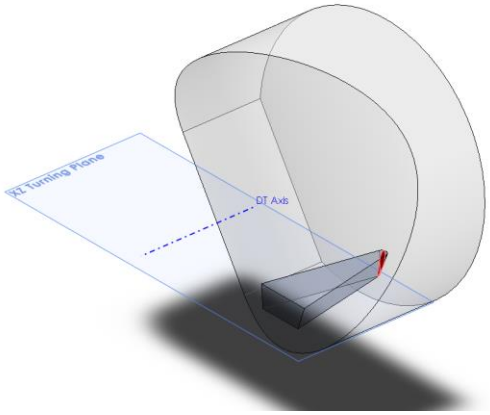

FIGURE 1. Example of a steep cylindrical lens surface (50° edge slope) being conventionally diamond turned via STS or FTS turning. Using a 12° clearance tool, the clearance face of the tool interferes with the lens surface.

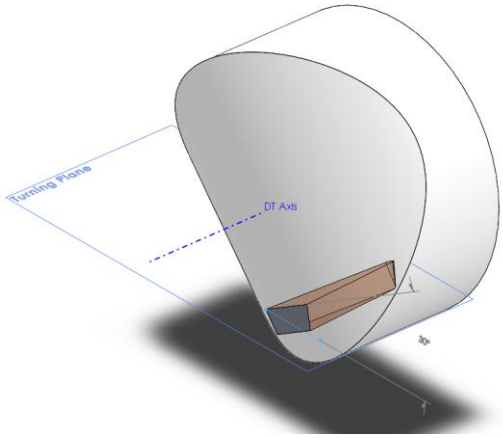

FIGURE 2. For the same part and tool as in Fig. 1, the primary clearance issue is resolved when the tool is rotated about its shank axis by 30°.

While rotating the tool about its axis can solve the interference problem between its front clearance face and surface, it would require an additional axis generally not available on diamond turning machines (DTM's). In contrast, many DTM's do,

nowadays, have a (vertical) Y-axis in addition to the traditional X- and Z- lathe axes. Leveraging this additional motion axis, one can achieve the effect of rotating the tool about its axis by the addition of Y-axis motion. By rotating the interpolation or turning plane of the toolpath (a plane intersecting both the rotation axis of the workpiece and the contact point of the tool) about the turning axis, as seen in Fig. 3 additional freedom in manipulating tool clearances can be gained. This rotation angle, or skew angle, thus increases the range of available surface slopes to be machined with a given diamond tool.

To visualize how skew angle affects tool clearance , it is useful to project the tool onto the radial and azimuthal cutting planes. Fig. 4 illustrates how the azimuthal clearance is limited by the front tool clearance angle for negative cutting slopes and the rake face for positive slopes. In contrast and shown in Fig. 5, radial clearance is governed entirely by the tool's window or radius included angle.

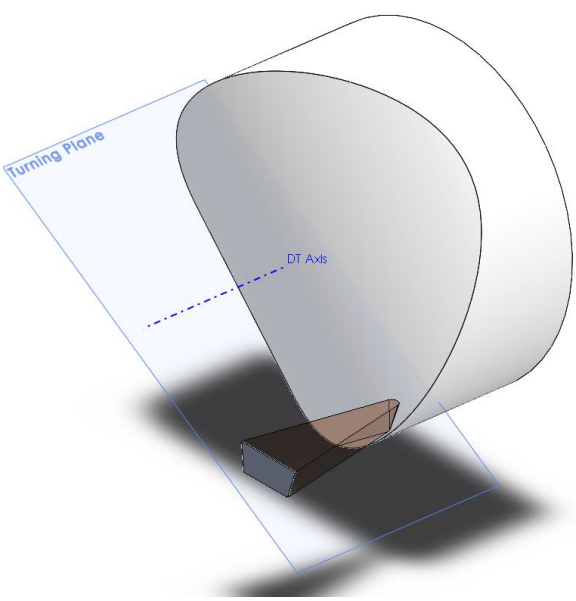

FIGURE 3. Since the tool cannot be easily rotated about its axis by 30°, the identical effect can be obtained by moving the tool out of the usual XZ turning plane by moving the Y-axis. This effectively tilts the turning path plane.

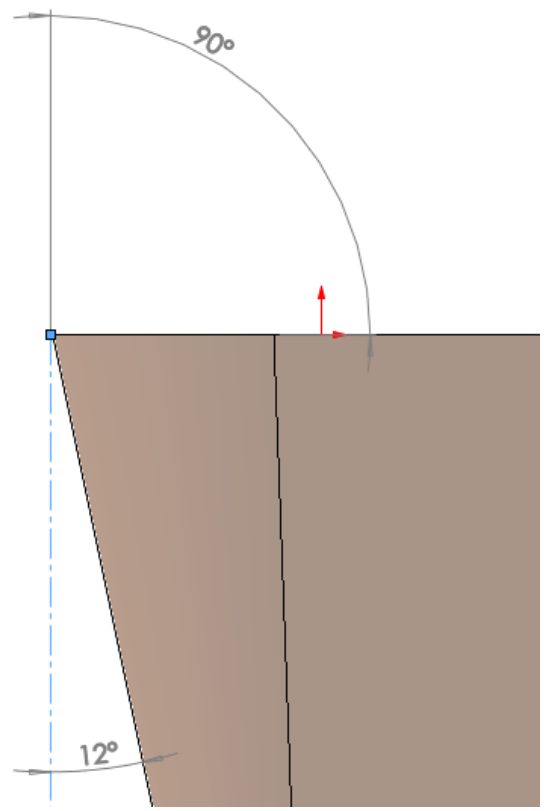

FIGURE 4. Example tool shown perpendicular to the rake face and parallel to the cutting direction for standard cutting with no skew.

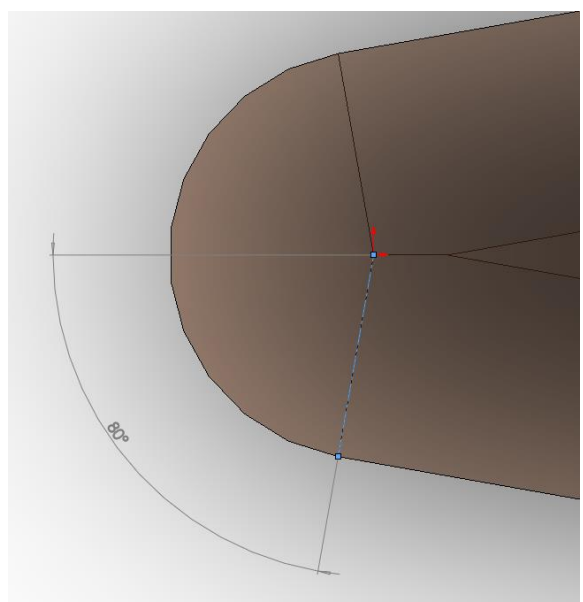

FIGURE 5. Example tool shown parallel to rake face in the radial clearance plane. In normal cutting (no skew), the radial clearance is ±80°

When adding a skew angle to the tool, , its clearances change significantly after projecting the rotated tool onto the radial and azimuthal cutting planes, as shown in figures 6 and 7.

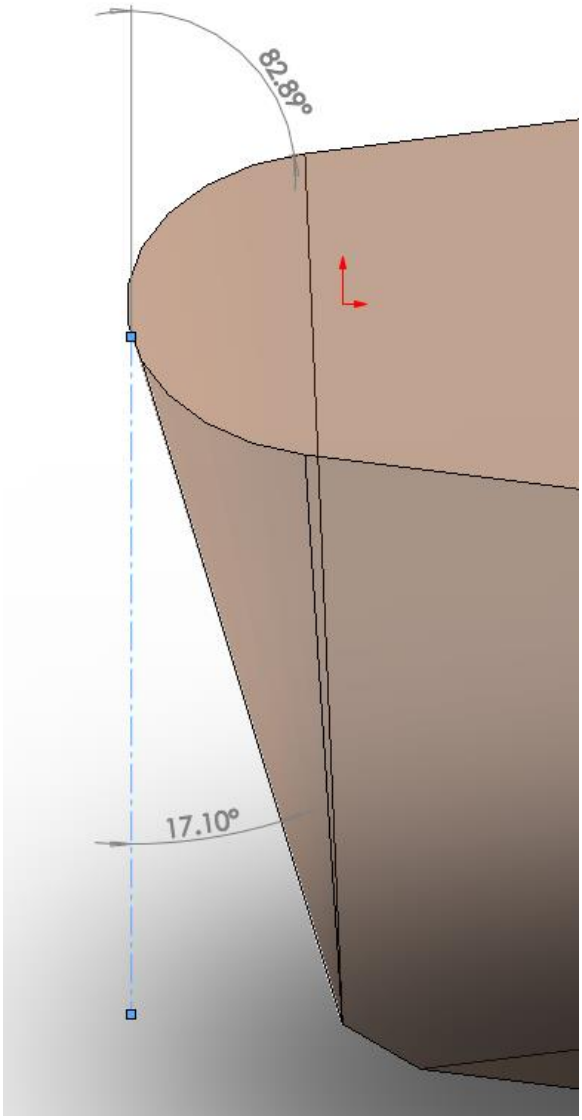

FIGURE 6. Example tool shown rotated to a skew angle of 45°. Note that the negative slope clearance angle has increased to about 17 and the positive clearance has decreased to about 83°.

Of particular interest when turning surfaces with large azimuthal slopes is the most limiting tool clearance, which is the negative azimuthal clearance angle. The relationship between this angle, α_{A-}, the primary conical clearance, α, and the skew angle, θ_s, is described by

$$sin(\alpha_{A-}) = \frac{\sin(\alpha)}{\cos(\theta_s)}. \quad (1)$$

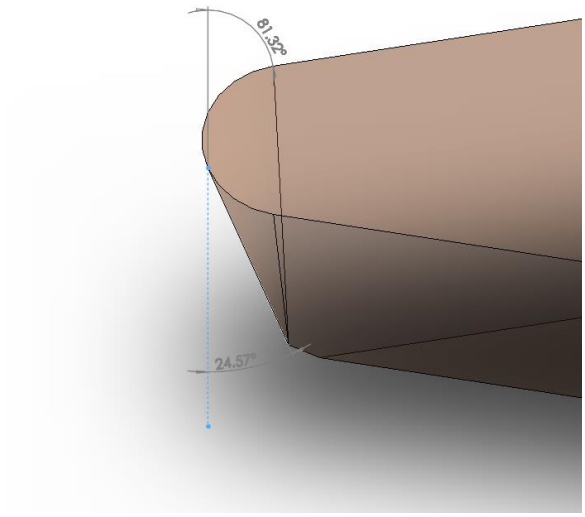

FIGURE 7. Going to a 60 degree skew angle (the maximum practical) doubles the negative slope clearance angle and nominally decreases the positive clearance angle. Similarly,

CUTTING MECHANICS

With the introduction of a programmed skew angle, diamond turning cutting mechanics can change significantly. Skew angles are, in principle, not unprecedented in machining. Wood planes, as pictured in Fig. 8, have been employing skew cutting to aid in shearing fibers on end-grain for centuries. While the t variation of rake angle [1] on a cutting tool influence forces and surfaces in diamond turning of free-forms, relatively little data is available on skew angle impact to date.

Figure 8. Wood cutting hand plane showing a skewed blade to aid in cutting wood fibers.

Large variations in rake and skew angle change geometry, friction and chip area. In the first order, the geometrical relationship between tool and workpiece is changing so that the local nose radius of the diamond tool effectively changes, impacting the theoretical surface finish of the surface. The geometry impact can be approximated by projecting the actual nose radius of the tool ointo the turning plane. This produces either an oblate or prolate ellipse for increased rake or skew angle magnitude, respectively. The major and minor axes of this ellipse, *a* and *b*, respectively can then be given by

$$a = r_t \cdot \cos|\alpha| \qquad (2)$$
$$b = r_t \cdot \cos|\theta_s|$$

where r_t is the tool nose radius in the rake plane, α is the rake angle and θ_s is the skew angle. Determining the projected nose radius then becomes a matter of calculating the localized radius at the contact point of the tool. For a flat, this effective nose radius is

$$r_{eff} = \frac{b^2}{a}. \qquad (3)$$

This effective tool radius can then be used to calculate a theoretical rms surface roughness

$$R_q \cong \frac{f^2}{24 r_{eff}} \qquad (4)$$

Generally, this means that increased rake angle magnitude increases the nose radius for decreased theoretical roughness and increased skew angle decreases the local nose radius for increased theoretical roughness. Additionally, since the cutting tool is potentially tilted about multiple axes, the preferred method of tool radius compensation for STS and FTS turning is only along the Z-axis, ensuring there are no oscillations in the toolpath along the vertical or radial axes. To compute compensated toolpath coordinates along the Z-axis only, it is necessary to raise the tilted tool along the positive Z-axis by the amount of overcut that would otherwise occur if no tool radius compensation were performed at all [2].

EXPERIMENTAL RESULTS

In practice, feeds and speeds can be adjusted so that tool geometry is not ultimately the driver of surface roughness. Since rake angles due to azimuthal slope changes and added skew angles have a significant impact on material shearing and removal, their interaction with the material tends to drive the surface finish. To determine some of these limits, experiments with varying rake and skew angles were performed BY diamond turning high-phosphorous nickel using a conventional 20° conical clearance single-crystal diamond tool with a nose radius of 0.25 mm as shown in Fig. 9. The tool was set up in a YZ turning configuration with the tip coincident with the machine B-axis. This allowed the skew angle to be controlled via X-axis offset and the rake angle via B-axis rotation. A mist of mineral spirits was used as coolant. Feedrate and depth of cut on the finish pass were 1 µm/rev and 1 µm, respectively.

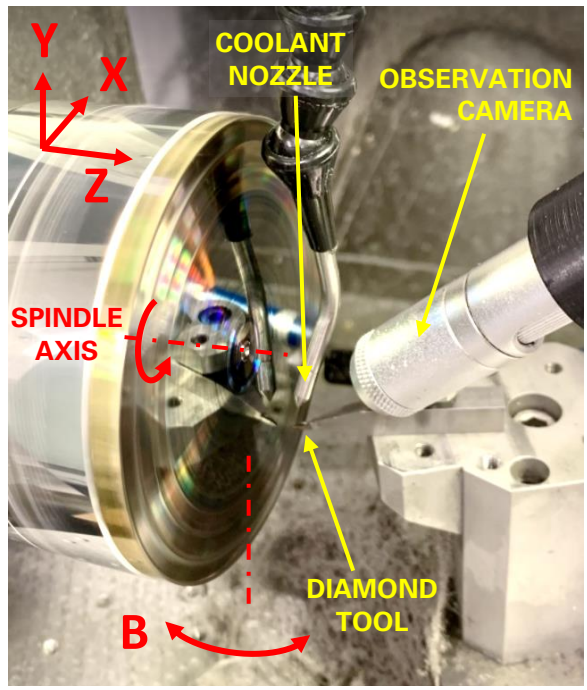

Figure 9. Diamond turning of high-phosphorous nickel with varying skew and rake angles.

Roughness data were collected using and optical profilometer and are shown as a function of skew and rake in Fig. 10. The results show that at the extremes of both rake and skew angle, the surface finish degrades significantly. Not shown are cutting results for ±80° of skew angle, which resulted in poor surface finish over most of the rake angle range. The key takeaway from the data, though, is that the technique produces good surface finishes over a wide range of rake and skew angles, showing that this diamond turning technique is useable in a wide range of applications.

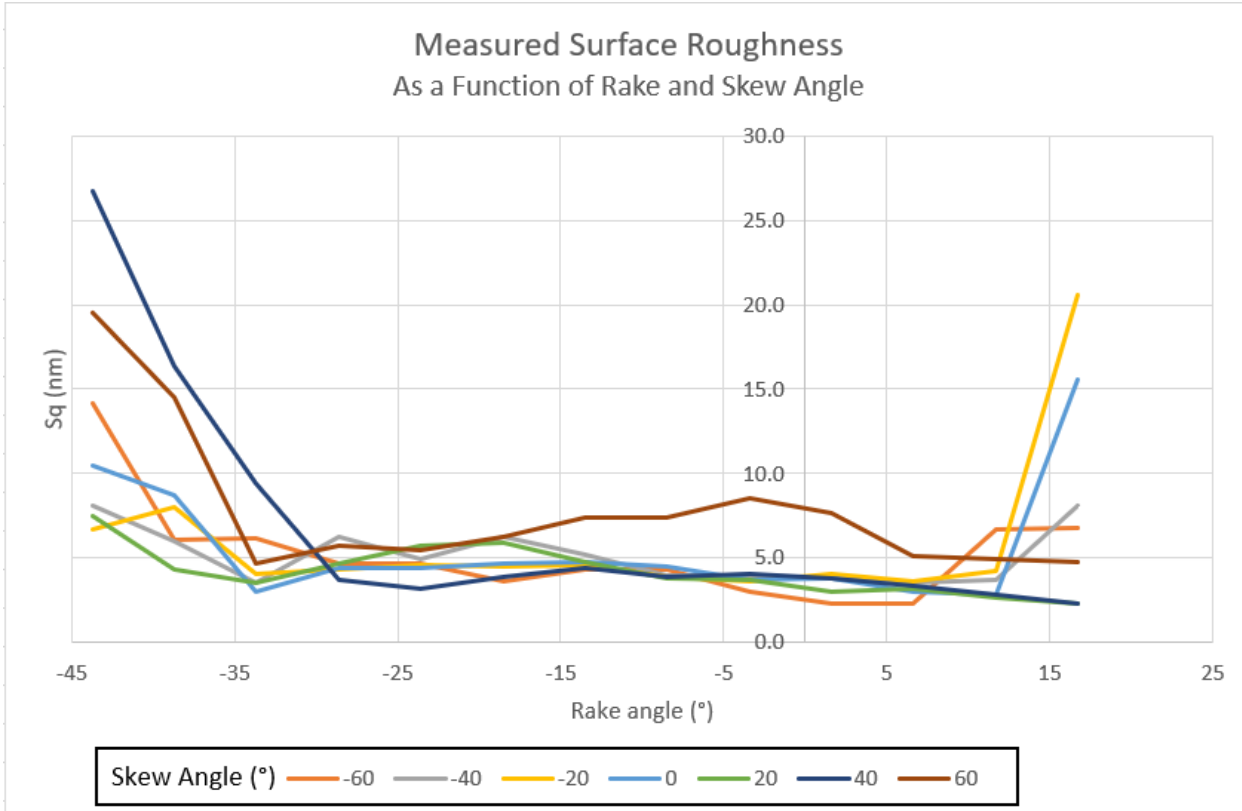

Figure 10. Experimental surface roughness results for rake angles between -45° and 18° and skew angles between -60° and 60°.

The two chief drivers of surface finish degradation at extreme rake and skew angles appear to be accumulation of a built up edge and vibration from high thrust force. As shown in Figure 12, discontinuous lines of material build-up on the material are an indicator of built-up edge (BUE) on the tool rake face [3]. BUE is not only problematic in directly driving significant increases in surface roughness but may also drive a dramatic increase in tool wear. The other mechanism driving surface finish at high negative rake and skew is vibration. As shown in Fig. 13, high-frequency synchronous vibration has all the hallmarks of being cutting force driven tool vibration given the consistent vibration frequency of 68 kHz. Stiffenting the tool may produce better behaivior at these extremes.

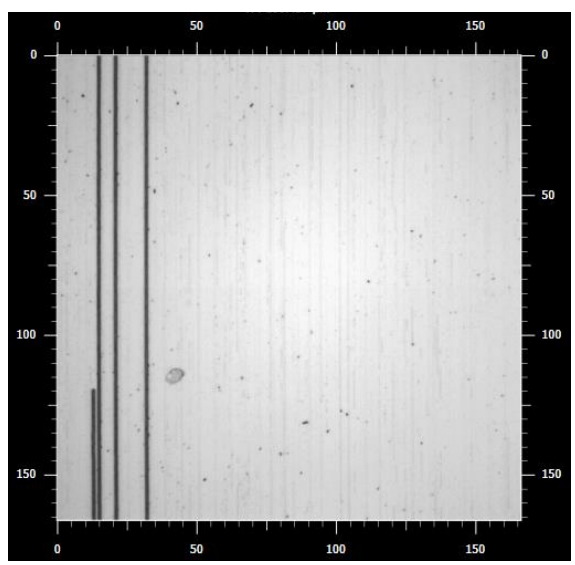

Figure 12. At steep rake angles, the surface finish is driven by drag buildup in the material. The sudden stopping and starting of buildup lines indicates that this is likely to be from a built-up edge on the tool. Data from at -60° skew, 2° rake.

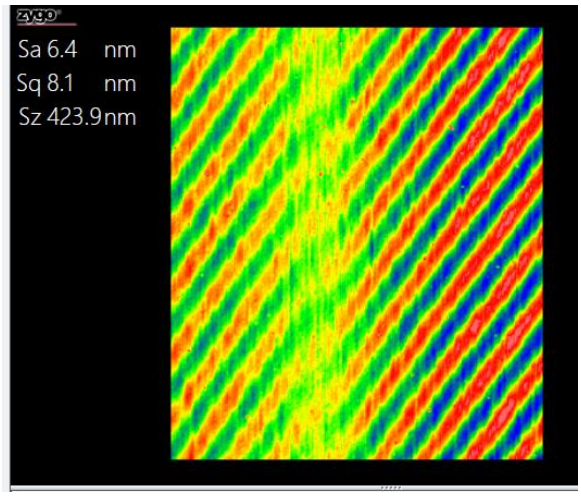

Figure 13. when skew angle and rake are strongly negative, high machining forces drive high-frequency vibrations in the tool leading to degraded surface finish. Data from at -40° skew, -44° rake.

CONCLUSIONS

By introducing a programmable skew angle that takes advantage of Y-axis motion now available on modern diamond turning machines, it has been shown that substantial gains can be made in the types of non-rotationally symmetric surfaces that can be diamond turned using slow-tool and fast-tool servo. Not only is it possible, but it is quite practical to take advantage of this newfound freedom in diamond tool motion as evidenced by the fact that good surface finishes are possible even when skew and rake angles are relatively large. At least for high-phosphorous nickel, significant for diamond turned molds used in injection molded optics, the work envelope is usefully and significantly expanded. Other materials will certainly show variations and will have to be explored.

REFERENCES

[1] A. Sohn, "Rake angle variation in diamond turning," in 22nd ASPE Annual Meeting, Dallas, TX, 2007.

[2] D. P. Yu, S. W. Gan, Y. S. Wong, G. S. Hong, M. Rahman and J. Yao, "Optimized tool path generation for fast tool servo diamond turning of micro-sctructured surfaces," The International Journal of Advanced Manufacturing Technology, vol. 63, no. 9-12, p. 1137–1152, 2012.

[3] Suit, Brandon Michael. "Analysis of Accelerated Tool Wear and Built Up Edge when Diamond Turning Ferrous Materials." (2016).